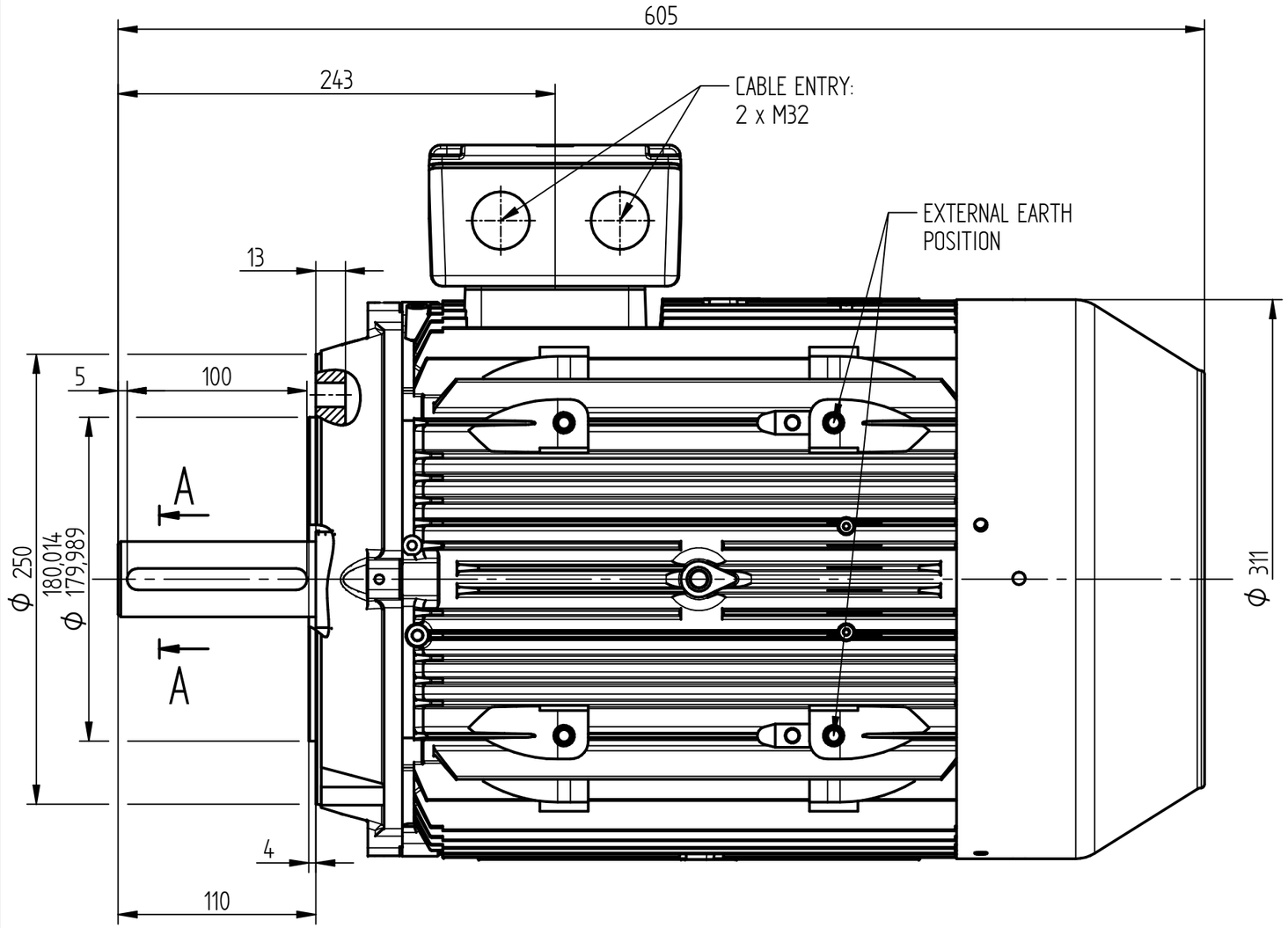

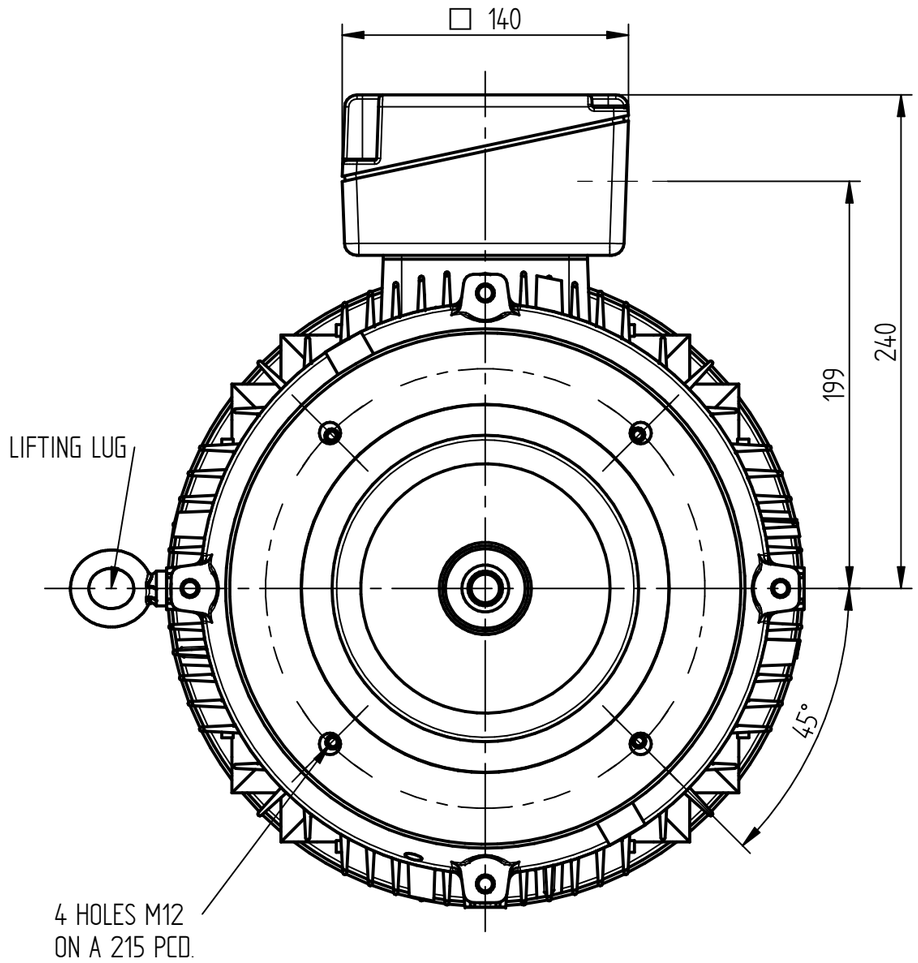

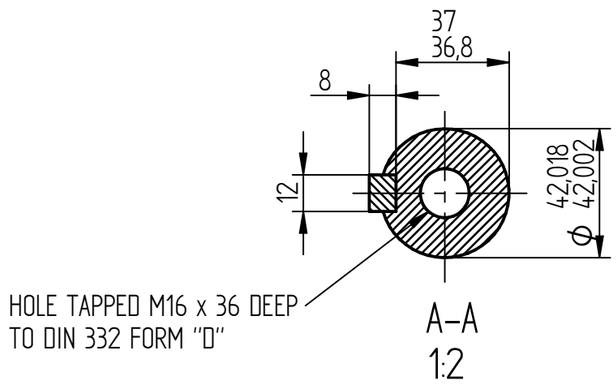

TERMINAL BOX POSITION:
- CAN BE ARRANGED AT EITHER 9, 12 OR 3 O`CLOCK.
- STANDARD TERMINAL BOX POSITION IS 12 O'CLOCK AS SHOWN.

CONDUIT ENTRIES:
- TERMINAL BOX CAN BE ROTATED AT 90° INTERVALS.

ALL MOUNTING DIMENSIONS: ISO 2768-mK ACC TO EN 22768-1/2

ALL DIMENSIONS IN MILLIMETERS

FIRST ANGLE PROJECTION

BROOK CROMPTON

Produced by ATB Tamel S.A. a company of ATB

SHEET SIZE	TITLE:		NAME	DATE	DRG. No.	WP-DA160M B14
A3	OUTLINE DIMENSION DRAWING TOTALLY ENCLOSED FAN COOLED WP-DA160M FRAME C FACE MOUNTED MOTOR	DRAWN	SZ	19-04-2019	DRG. REF.	
		CHECKED	RG	19-04-2019	REVISION:	DATE:
		SCALE	1 : 3			